3" Dial Adjust-Angle Bimetal
Model 3AA

WEKSLER GLASS THERMOMETER CORP.

STANDARD FEATURES

- 3" dial size
- All welded 304 stainless steel construction
- Silicone dampened bimetal element
- Easy external recalibration adjustment with 1/16" Allen Head wrench
- Anti-parallax dial
- Hermetically sealed per ASME B40.3
- Accurate to 1% per ASME B40.3 (for accurate reading thermometer must be immersed past groove on lower portion of stem)
- Over-range protection is 50% up to 500°F (10% above 500°F)
- Fully gasketed glass lens. Plastic or shatterproof lens is available.

See page 20 for thermowells.

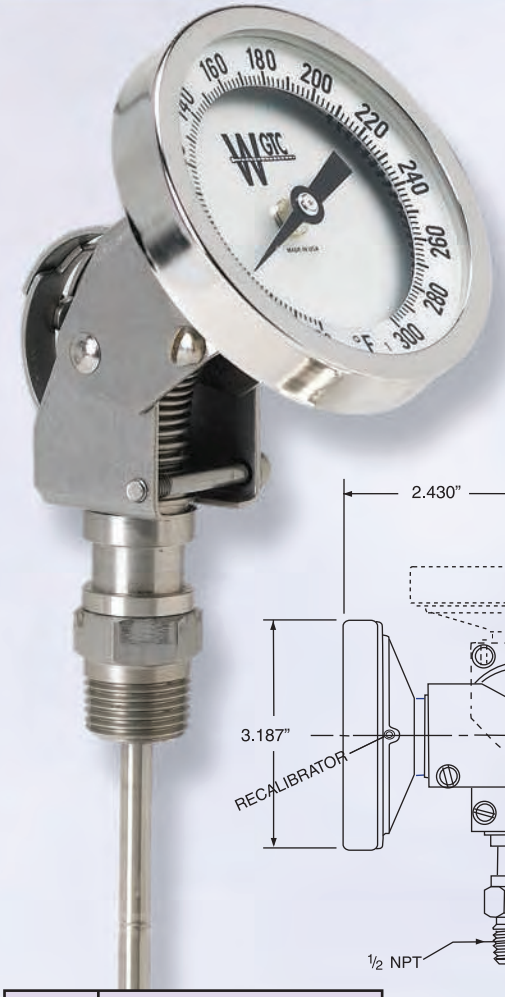

◀MODEL 3AA
3" Dial
5" dial available.
See page 13.

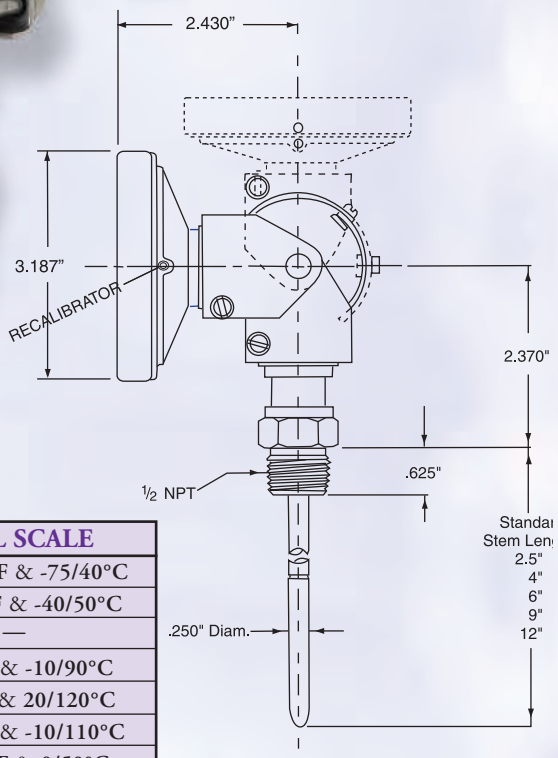

TEMPERATURE RANGES

CODE	FAHRENHEIT
01	-100/100°F
02	-40/120°F
03	0/150°F
04	0/200°F
05	0/250°F
06	20/240°F
07	25/125°F
08	50/250°F
09	50/300°F
10	50/400°F
11	50/500°F
12	150/750°F
13	*200/1000°F

CODE	CELSIUS
CZ	-50/100°C
CB	-50/50°C
CE	-50/25°C
CF	-40/70°C
CG	-10/110°C
CK	0/50°C
CN	0/100°C
CP	0/150°C
CQ	0/200°C
CR	0/250°C
CS	0/300°C
CT	100/400°C
CU	*100/550°C

CODE	DUAL SCALE
DB	-100/100°F & -75/40°C
DE	-40/120°F & -40/50°C
–	—
DF	0/200°F & -10/90°C
DG	0/250°F & 20/120°C
DK	20/240°F & -10/110°C
DN	25/125°F & 0/50°C
–	—
DQ	50/300°F & 10/150°C
DR	50/400°F & 0/200°C
DS	50/500°F & 0/250°C
DT	150/750°F & 50/400°C
DU	*200/1000°F & 100/550°C

*Not recommended for continuous use above 800°F or 425°C

- Silicone filled models available for extreme vibration or low temperature application

HOW TO ORDER - PLEASE SPECIFY THE FOLLOWING:

MODEL #	STEM LENGTH	RANGE	OPTIONS
3AA	**02** = 2 1/2" stem **09** = 9" stem **04** = 4" stem **12** = 12" stem **06** = 6" stem	**2 digit code** from tables	**AA** = Plastic Lens **SS** = Shatterproof Lens **UU** = Union Connection **BB** = 3/8" Diameter Stem **FF** = Silicone Filled Case

Customer _____
Project _____
Engineer _____
PRO or P.O. # _____

556 Dettor Rd., Suite 10, Charlottesville, VA 22903
Phone: 877.988.8003 | Fax: 866.982.9882
www.wekslerglass.com | sales@wekslerglass.com
International: Phone: 434.977.4544 | Fax: 434.977.4548